Current Natural Sciences

HYDRODYNAMICS

Lihong WU

Marine Propeller Theory and Application

SCIENCE PRESS

edp sciences

Current Natural Sciences

HYDRODYNAMICS

Marine Propeller Theory and Application

Lihong WU

Marine propellers have been the primary means of ship propulsion for centuries and remain at the heart of modern marine engineering. Reflecting the latest advances in the field, this book provides a comprehensive introduction to the theory, design, analysis, and performance of marine propellers. Combining fundamental principles with practical applications, it presents a wealth of numerical results derived from computational fluid dynamics (CFD) simulations, state-of-the-art measurement and testing techniques, and detailed design case studies. The eight chapters cover the development of marine propulsion systems, propeller geometry, propulsion theory, open-water testing, ship–propeller interaction, cavitation, structural strength, and chart-based propeller design.

Moving beyond purely theoretical treatments, the book offers an accessible and practice-oriented approach. Through extensive CFD visualizations and engineering examples, it illustrates the complex relationships between propeller geometry, hydrodynamic performance, cavitation behaviour, and structural integrity. It also introduces modern design, manufacturing, measurement, and testing technologies, together with advanced chart-based design methods that extend beyond conventional efficiency-focused approaches.

This work will be a valuable reference for researchers, graduate students, and engineers in naval architecture, marine engineering, ship hydrodynamics, and propulsion system design.

Lihong WU is Professor at Dalian Maritime University, where she has been serving as a faculty member since 2010, teaching undergraduate courses in *Ship Resistance* and *Ship Propulsion*, and a postgraduate course in *Marine Propeller Theory*. Her research focuses on marine propeller design and hydrodynamics, ship hydrodynamics, and computational fluid dynamics.

ISBN : 978-2-7598-4095-3

9 782759 840953

edp sciences
www.edpsciences.org

SCIENCE PRESS

Current Natural Sciences

Lihong WU

Marine Propeller Theory and Application

SCIENCE PRESS

edp sciences

Printed in France

EDP Sciences – ISBN(print): 978-2-7598-4095-3 – ISBN(ebook): 978-2-7598-4096-0
DOI: 10.1051/978-2-7598-4095-3

All rights relative to translation, adaptation and reproduction by any means whatsoever are reserved, worldwide. In accordance with the terms of paragraphs 2 and 3 of Article 41 of the French Act dated March 11, 1957, "copies or reproductions reserved strictly for private use and not intended for collective use" and, on the other hand, analyses and short quotations for example or illustrative purposes, are allowed. Otherwise, "any representation or reproduction – whether in full or in part – without the consent of the author or of his successors or assigns, is unlawful" (Article 40, paragraph 1). Any representation or reproduction, by any means whatsoever, will therefore be deemed an infringement of copyright punishable under Articles 425 and following of the French Penal Code.

This book cannot be reproduced or used for training artificial intelligence systems. Text and data mining is prohibited in accordance with Article 4(3) of Directive (EU) 2019/790.

The printed edition is not for sale in Chinese mainland. Customers in Chinese mainland please order the print book from Science Press. ISBN of the China edition: Science Press 978-7-03-067488-3

© Science Press, EDP Sciences, 2026

Preface

A distinguishing feature of the current state of screw propeller research is that many numerical simulation results were produced based on commercially available computational fluid dynamics (CFD) codes and software packages, and the new techniques, such as particle image velocimetry, created many real-time experiment data on flow field around propellers. This provides a more readily available visualization of the complexity of the traditional screw propeller with respect to geometry, hydrodynamic performance, cavitation and strength analysis. These results can be of much more interest to students and professionals by providing visualizations as opposed to more traditional textbooks which are purely theoretical. Therefore, a textbook including these new developments is more welcome than the pure theoretical explanation. This is the purpose of this book.

This book describes in detail new technologies used in the design, manufacture and measurement of propellers. Numerous images from websites, numerical simulation results from other researchers' and the author's own research, experimental tests, and the latest development from the relevant literatures are included and summarized in the book. Together, this book provides a more complete, easy description to understand modern approaches in this subject. In addition, relatively challenging questions are presented at the end of each chapter to enhance readers' understanding and practical skills. The theory description in this book is based on the author's experience in teaching and research over decades. The design work in this book is illustrated with figures that help to explain the practical design of a propeller considering multiple characteristics, with no limitation to efficiency. A supplementary list of MS Excel spreadsheets providing calculations for the propeller designs are presented as examples.

This book is divided into eight chapters. Chapter 1 discusses the development of propulsion. Chapter 2 gives the geometry of the screw propeller, its definition and the pitch measuring method. Chapter 3 illustrates the basic theory of propeller thrust and torque generation. Chapter 4 focuses on open water tests and related hull resistance and

propulsion tests. Chapter 5 presents the interaction between hull and propeller. Chapter 6 deals with cavitation. Chapter 7 deals with blade strength, while Chapter 8 gives a detailed explanation of the propeller design.

Special thanks are due to the following organizations: Dalian Maritime University (DMU), China Scholarship Council (CSC), University of Western Australia (UWA), Shenyang Institute of Automation (SIA) and the Ship Towing Tank of the College of Shipbuilding Engineering, Harbin Engineering University (HEU). DMU sponsored the publication of the book. CSC provided funds for the author's visit to UWA, where the author conducted research on ship propellers and was motivated to write a professional work on the subject of ship screw propellers in English, and prepared much of the manuscript there. SIA provided funding for further research on marine vehicles. HEU provided valuable experimental images, data and numerical analysis.

I would like to thank Professor Su Yumin of HEU, who provided a great deal of advice on content and editing, and Professor Wang Chao of HEU, who provided many research data and visualization images. In addition, some logistical work was done by my postgraduate and undergraduate students. It took five years for me to finish this manuscript. I wish this book can improve understanding and design capability for students and professionals in the marine and ocean industry.

Wu Lihong
Dalian, Liaoning, China
December, 2020

Contents

Preface

1. Propulsion ····· 1

1.1 General principle ····· 1

1.1.1 Propulsors ····· 1

1.1.2 Development of the screw propeller ····· 5

1.1.3 Types of propellers ····· 7

1.2 Extension of effective power concept ····· 13

Questions ····· 15

2. Geometry of a screw propeller ····· 16

2.1 Propeller geometry ····· 16

2.2 Helicoidal surface ····· 18

2.3 Propeller features ····· 19

2.3.1 Coordinate systems and propeller outlines ····· 19

2.3.2 Blade sections ····· 22

2.4 Pitch measurements ····· 24

2.4.1 Simple measurement method ····· 24

2.4.2 Complex measurement method ····· 26

Questions ····· 26

3. Propeller basic theory ····· 27

3.1 Momentum theory ····· 28

3.1.1 Ideal propulsor ····· 28

3.1.2 Momentum theory for ideal propeller ····· 34

3.2 Blade element theory ····· 38

3.2.1 Velocity diagram ····· 39

3.2.2 Lift and drag on aerofoil ····· 40

3.3 Propeller hydrodynamic performance ····· 44
3.4 Presentation of propeller data ····· 47
Questions ····· 49

4. Open water test ····· 50

4.1 Dynamic similarity of open water test ····· 50
4.2 Scale effects ····· 56
4.3 Open water test setup ····· 57
4.4 Other tests related to screw propeller design ····· 63
4.4.1 Hull resistance tests ····· 63
4.4.2 Propulsion tests ····· 64
Questions ····· 65

5. Interaction between hull and screw propeller ····· 66

5.1 Wake effects ····· 66
5.1.1 Reason of wake ····· 68
5.1.2 Wake fraction ····· 70
5.1.3 Wake measurement ····· 71
5.2 Relative rotation efficiency ····· 79
5.3 Thrust deduction ····· 80
5.4 Hull efficiency ····· 81
5.5 Propulsion coefficient ····· 82
5.6 Thrust augmentation devices ····· 83
5.6.1 Devices before the propeller ····· 85
5.6.2 Devices at the propeller ····· 90
5.6.3 Devices behind the propeller ····· 94
Questions ····· 97

6. Cavitation ····· 98

6.1 Cavitation phenomena ····· 98
6.2 Prediction of cavitation inception ····· 100
6.3 Cavitation and its effects ····· 107

6.4 Cavitation tunnel tests ····· 110
6.4.1 Cavitation tests conditions ····· 110
6.4.2 Cavitation tunnel ····· 111
6.4.3 Cavitation tunnel measurement ····· 112
6.5 Cavitation verification ····· 115
Questions ····· 118

7. Strength of propeller ····· 119

7.1 Strength development ····· 119
7.2 Rules for checking structural strength ····· 120
7.2.1 Example of strength calculation ····· 121
7.2.2 Pitch ratio modification ····· 123
7.2.3 Propeller weight and moment of inertia ····· 124
7.3 Cantilever beam method ····· 126
7.4 Blade stress computational methods ····· 129
7.5 Detailed strength design considerations ····· 133
7.6 Propeller backing stresses ····· 134
7.7 Blade root fillet design ····· 135
7.8 Residual blade stresses ····· 136
7.9 Admissible design stress ····· 137
7.10 Full scale blade strain measurement ····· 139
Question ····· 139

8. Marine propeller designs based on charts ····· 140

8.1 Design purpose ····· 143
8.2 Design considerations ····· 144
8.2.1 Choice of propeller type ····· 145
8.2.2 Engine characteristics ····· 146
8.2.3 Propeller details ····· 147
8.3 Maximum efficiency design with series charts ····· 149
8.3.1 *B*-δ charts derivation ····· 151
8.3.2 *B*-δ application ····· 152

8.4 Standard series charts ····· 156
8.4.1 AU series charts ····· 156
8.4.2 B-screw series ····· 163
8.5 Design process ····· 165
8.6 Propeller design example ····· 167

References ····· 182

Appendix ····· 183

Appendix 1 AU standard series charts ····· 183
Appendix 2 Nomenclature ····· 186
Appendix 3 SI and USC conversions and constants ····· 187

Color Figures

1. Propulsion

1.1 General principle

1.1.1 Propulsors

Ship propulsion systems supply sufficient power to move the ship at a given speed by converting mechanical energy into kinetic energy of a mass of water to create a counterforce acting on the ship. This force is called thrust which pushes or pulls the vessel through the water. Depending on the source of power, there have been different types of thrusters throughout history, such as masts or sail using wind power, rudder or paddle using human power (Fig.1.1) and paddle wheel, propeller and waterjet propulsion from engines (Fig.1.2). In modern times, in general, ships are driven by propellers using fuel energy. As a form of renewable energy resource for reducing the fuel consumption and pollution of ocean-going vessels, wind and solar power are combined with conventional power in advanced vessels.



（a）Sail



（b）Oar



（c）Paddle

Fig.1.1 Sail, oar and paddle



（a）Paddle wheel ship



（b）Waterjet turbine

Fig.1.2 Paddle wheel ship and waterjet turbine

Paddle wheel

Paddle propulsion predates screw propulsion but has almost completely disappeared except for a very few specialized applications, such as limited service in lakes and river services, either as a tourist or nostalgic attractions, or alternatively, where limited draughts are encountered. Nevertheless, until a few years ago, the Royal Navy favored their use on certain classes of harbor tug for their exceptional maneuverability (Carlton, 2018).

The principal reason for the demise of the paddle wheel was its intolerance to large changes in draught and the complementary problem of variable immersion in seaways. When superseded by screw propulsion for ocean-going vessels, their use was largely confined through the first half of the previous century to river steamers and tugs. However, the paddle wheel suffers from damage caused by flotsam in the river and is relatively expensive to produce compared to fixed pitch propeller designs.

Paddle design progressed over the years from the original simple fixed float designs to the feathering float system which was subsequently featured throughout much of its use. A typical feathering float paddle wheel design is shown in Fig.1.3 from which it can be seen that the float attitude is governed from a point just slightly off-center of the wheel axis. Feathering floats are essential to provide improved efficiency on relatively small diameter and deeply immersed wheels. However, on larger wheels, which are not so deeply immersed, feathering floats are not essential and fixed float designs are normally adopted. This led to the practice of adopting feathered wheels in side-mounted wheel applications, such as the Clyde or Thames excursion steamers, because of the consequent wheel diameter restriction imposed by the draught of the vessel. In contrast, stern wheel propelled vessels, such as those designed for the river service, typically the use of fixed floats was preferred since the wheel diameter restriction did not apply.

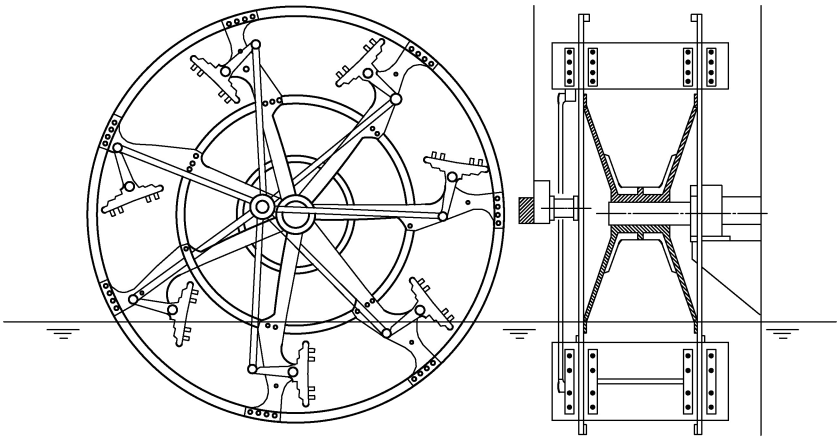

（a）Front view （b）Side view

Fig.1.3 Paddle wheel

With regard to overall design parameters, based upon experience it was found that the number of paddles fixed on a wheel should be about one for every meter of diameter of the wheel and for feathering designs this number was reduced by around 60 or 70 percent of the fixed float “rule”. The width of the floats used in a particular design was on the order of 25 to 40 percent of the float length for feathering designs, but this figure was reduced for the fixed float paddle wheel to between 20 and 25 percent. A further constraint on the immersion of the floats was that of peripheral speed and, in general, feathering float width whilst with stern wheelers, the tops of the floats were never far from the water surface.

Cycloidal propellers

Cycloidal propeller development started in the 1920s, initially with the Kirsten-Boeing and subsequently the Voith-Schneider designs. The cycloidal or vertical axis propellers basically comprise a set of vertically mounted vanes, six or eight in number, which rotate on a disc mounted in a horizontal or near horizontal plane. The vanes are constrained so as to move about their spindle axis by a governing mechanical linkage, relative to the rotating disc in a predetermined way. The Kirsten-Boeing propeller is illustrated schematically in Fig.1.4 (a). It should be noted in the figure that the vanes’ attitude relative to the entire circumference, which governs their tracking path, is determined by referring the motion of the vanes to a particular point on that

circumference. As such, it can be deduced that each vane makes half a revolution about its own spindle during one revolution of the entire propeller disc. The thrust developed by this propeller design is governed by rotational speed and the direction of the resulting thrust by the reference point on the circumference of the vane-tracking circle.

The design of the Voith-Schneider propeller is rather more complex since it comprises a series of linkages that enable the individual vane motions to be controlled from points other than on the circumference of the vane-tracking circle. A particular value of the eccentricity of the vane-control center point from the center of the disc is demonstrated in Fig.1.4 (b). Controlling the eccentricity, in turn governs the vane-pitch angles, thus allowing both thrust magnitude and direction to be controlled independently of rotational speed.

Vertical axis propellers do have a considerable advantage in maneuverability or station keeping and this is an important factor in the ship design since the resultant thrust can be readily directed along any navigational bearing and have variable magnitude. Indeed, this type of propeller avoids the necessity for a separate rudder installation on the vessel. Despite the relative mechanical complexity, these propellers have shown themselves to be reliable in operation over many years of service.

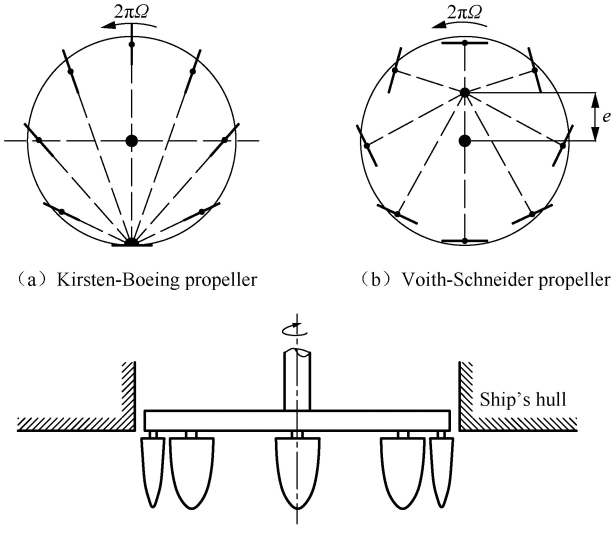

（a）Kirsten-Boeing propeller　（b）Voith-Schneider propeller

（c）Propeller installation location

Fig.1.4　Vertical axis propeller principle

Ω: angular velocity

Waterjet propulsion

The principle of operation of present-day waterjet is that in which water is drawn through a ducting system by an internal pump which adds energy to the water to be expelled aft at high velocity. The unit's thrust is primarily generated as a result of the momentum increase imparted to the water. The waterjet propulsion system has a plunger or centrifugal pump installed to provide the motive power, as shown in Fig. 1.5. In recent years, waterjet propulsion has found considerable application on a wide range of small high-speed craft while its application to larger craft is growing with tunnel diameter upwards of 2m being considered.

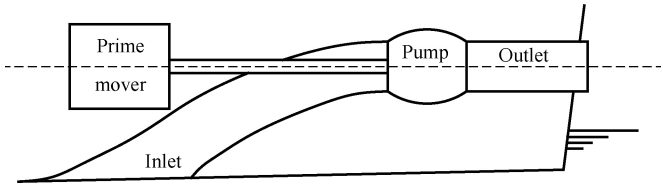

Fig.1.5 Waterjet configuration

Waterjet propulsion offers a further dimension to the range of propulsion alternatives and tends to be used where other propulsion forms are rejected for some reasons, typically for reasons of efficiency, cavitation, noise or immersion, and draught. As an example, consider the case of a small vessel traveling at 45kn where one might expect that a conventional propeller would be fully cavitating, whereas in the corresponding waterjet unit the pump would not cavitate. Consequently, the potential for waterjet application, neglecting any small special purpose craft with particular requirements, is where conventional, trans-cavitating and super-cavitating propeller performance begins to decline. Indeed, surface piercing propellers and waterjet systems are to some extent competitors for some similar applications. However, waterjet units tend to be heavier than conventional propeller-based systems. Therefore, they might be expected to find favor in a large craft such as wave-piercing ferries.

1.1.2 Development of the screw propeller

Most ships employ a system to move water aft relative to the ship. A variety of means are available for propelling this stream of water aft, but by far the most

commonly used is a screw propeller (Fig.1.6) and this will be explained in detail.

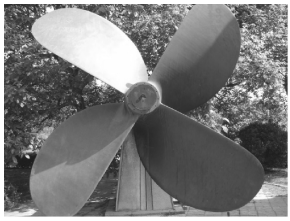
（a）Front view

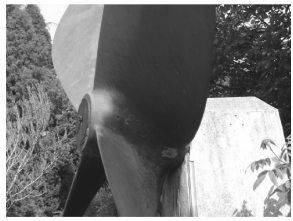
（b）Side view

Fig.1.6　Screw propeller

A propeller is a type of fan that transmits power by converting rotational motion into thrust. A marine propeller is a propulsion device that converts the greater part of the power from a marine engine into a thrust force to propel a marine vessel. The history of using a screw propeller has a long timeline (Table 1.1), beginning from around 400 B. C. when Archytas used an incline on a cylinder to make a helix, or screw. Some 200 years later, Archimedes used a similar screw to lift water, which was used for irrigation in ancient times as shown in Fig.1.7.


（a）A screw lifting water


（b）Water wheel propelled by man power in farm

Fig.1.7　Screws lifting water

Table 1.1　Timeline for development of the screw propeller

Time	Scientists	Development of propeller
400 B. C.	Archytas	Put an incline on a cylinder
200 B. C.	Archimedes	Used screws to lift water
1480-1510	Lenoardoda Vinci	Sketched a helicopter driven by a screw
1680	Robert Hooke	Moved water with vanes of a windmill

continued

Time	Scientists	Development of propeller
1752	Bernoulli	Propelled boats using “vanes set at an angle of 60° to both the arbor and the keel”
1770	James Watt	Proposed a screw propeller
1776	David Bushnell	Used a propeller to drive his submarine “turtle”, the propeller has one single blade
1784	The Frenchman Vallet	Propelled a boat with a propeller mounted above the boat, uses a three-bladed propeller below a balloon
1786	A. J. P. Paucton	Published his book, and proposed a horizontal axis rotor for propulsion
1798	Robert Fulton	Experimented with four-bladed propeller on a ship
1815	Richard Trevithick	Designed a propeller with blades placed obliquely on a cylinder, powered by a steam engine
1824	Monsieur Dollman	Counter-rotating propellers with two-bladed set of windmill type were made to propel a small craft
1843	George Cayley	Designed an ingenious convertiplane, equipped with four rotors and twin propellers
1865	W. J. M. Rankine A. G. Greenhill R. E. Froude	Developed his momentum theory (or disk actuator theory)
1878	William Froude	Developed the blade element theory
1900-1905	The Wright brothers	Designed and tested propellers systematically and succeed in 1903, performing their famous first powered flights
1907	Lancaster	Published his “Aerodynamics”, including a theory of optimum propellers
1910	Coanda	Tested his piston engine powered jet unit
1919	Ludwig Prandtl Albert Betz	Calculated optimum propellers, having minimum induced loss
1924	Dr. H. S. Hele-Shaw T.E. Beacham	The constant speed propeller is patented
1939	Ernst Heinrich Heinkel	The Heinkel He 178 is the first turbo-jet-driven airplane
1980s	NASA and industry	Performed tests with high speed propellers for transport aircraft

1.1.3 Types of propellers

Screw propellers have been commonly used for propelling ships or aircraft, and

have many different types from the very beginning. Accordingly, the principal propeller types are briefly reviewed by outlining their major features and characteristics together with their general areas of application.

Ducted propellers

Ducted propellers (shown in Fig.1.8), as the name implies, generally comprise two principal components. The first is an annular duct having a foil cross-section which is often of uniform shape around the duct. Therefore, the duct is symmetric with respect to the shaft centerline, or has certain symmetric features to accommodate the wake flow field variations. The second component, the propeller, is a special case of a non-ducted propeller in which the design of the blades having been modified to take into account the flow interaction caused by the presence of the duct in its flow field.

The propeller for these units can be either the fixed or controllable pitch types and in some special applications, such as torpedo propulsion, may be comprised of a counter-rotating pair. Ducted propellers, sometimes referred to as Kort nozzles (a propeller fitted with a non-rotating nozzle) by way of recognition of the Kort Propulsion Company's initial patents and long association with this type of propeller. They have been used for many years in applications where high thrust at low speed is required, typically in towing and trawling situations. In such cases, the duct generally contributes some 50 percent of the propulsor's total thrust at zero ship speed, termed the bollard pull condition. However, this relative contribution of the duct falls to more modest amounts with increasing ship speed and it is also possible, in certain conditions, to negatively contribute to the propulsor thrust at high speeds.

There are nominally two forms, namely the accelerating duct and decelerating duct, and these are shown in Fig.1.9 (a), (b), (c), and (d), respectively. The underlying reason for this somewhat artificial designation can be appreciated, in global terms by considering their general form in relation to the continuity equation of fluid mechanics. This can be expressed for incompressible flow in a closed conduit between two stations *a*-*a* and *b*-*b* as

$$\rho A_a V_a = \rho A_b V_b \tag{1.1}$$

where V_a is the velocity at station *a*-*a*; V_b is the velocity at station *b*-*b*; A_a is the cross-section area at station *a*-*a*; A_b is the cross-section area at station *b*-*b*; ρ is the density of the fluid.



Fig.1.8 A ducted propeller

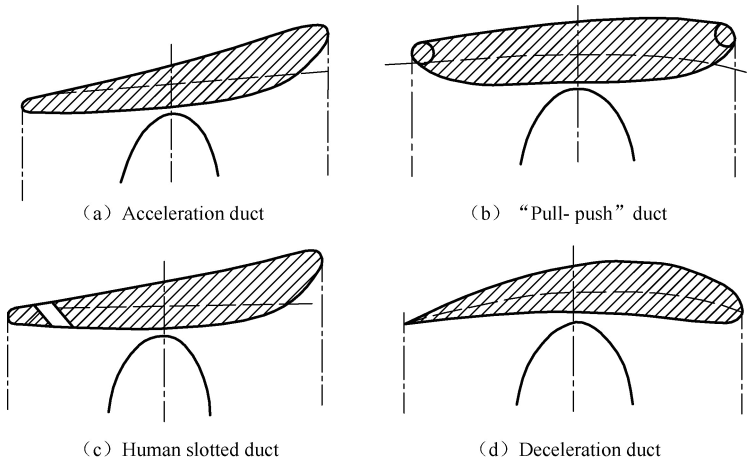

Fig.1.9 Duct types

Within this context station *b*-*b* can be chosen in way of the propeller disc whilst *a*-*a* is some way forward although not necessarily at the leading edge. In the case of Fig.1.9(a), which shows the accelerating duct, it can be seen that A_a is greater than A_b since the internal diameter of the duct is greater at station *a*-*a*. Hence, from Equation (1.1) and since water is incompressible, V_a must be less than V_b which implies an acceleration of the water between station *a*-*a* and *b*-*b*. The converse situation is true in the case of the decelerating duct shown in Fig.1.9 (d). To determine precisely which form the duct actually is, as indeed this is important, the induced velocities of the propeller also need to be taken into account in the velocity distribution throught the duct.

Podded and azimuthing propulsors

Azimuthing thrusters have been used for many years and have either non-ducted or ducted propeller arrangements. A podded propulsor is presented in Fig.1.10. If the motor is situated in the ship's hull then the system would be termed an azimuthing propulsor and most commonly the mechanical drive would be in a *Z* or *L* arrangement relative to the propeller shaft. Frequently, the coupling between the vertical and horizontal shafts is via spiral bevel gears.

In the case of a podded propulsor, the drive system normally comprises an electric motor directly coupled to a propeller shaft, which is supported on two rolling element bearing systems: one frequently being a radial bearing closest to the propeller while the other is a spherical roller bearing at the opposite end of the shaft. Nevertheless, variants of the arrangement do exist. The propellers associated with these propulsors have been of the fixed pitch type and are commonly built-up although their size is not particularly large.

Tractor arrangement of podded and azimuthing propulsors generally have an improved inflow velocity field since they do not have a shafting and a-bracket system ahead of them to cause a disturbance to the inflow. This tends to help suppress the blade rate harmonic pressure since the relatively undisturbed wake field close to zero azimuthing angles is more conducive to maintaining low rates of growth and collapse of cavities. However, there is a tendency for these propellers to exhibit broadband excitation characteristics and during the design process care has to be exercised to minimize these effects. At high azimuthing angles, the flow field is more disturbed.

Contra-rotating propellers

The contra-rotating propeller principle, comprising two coaxial propellers sited one behind the other and rotating in opposite directions, has traditionally been associated with the propulsion of aircraft (shown in Fig.1.11). A contra-rotating propulsion system has the hydrodynamic advantage of recovering part of the slipstream rotational energy which would otherwise be lost to a conventional single screw system. Furthermore, because of the two propeller configuration, contra-rotating propellers possess a capability to balance the torque from the propulsor which is an important